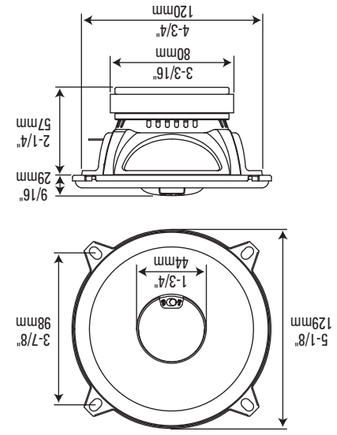

Declaration of Conformity

CE

We, Harman Consumer Group, Inc.
2, route de Tours
72500 Château du Loir
France

declare in own responsibility that the products described in this owner's manual are in compliance with technical standards:

EN 61000-6-3:2001
EN 61000-6-1:2001

Klaus Lehherz
Harman Consumer Group, Inc.
Château du Loir, France 1/09

Infinity® H Harman International

Designed and engineered in the USA. Conception et design aux E.U.A.
A valid serial number is required for warranty coverage. Un numéro de série valable est exigé pour la couverture de la garantie.
Features, specifications and appearance are subject to change without notice.
Les dispositifs, les caractéristiques et l'aspect sont sujets au changement sans communication préalable.
Harman International, Consumer Division, 8500 Balboa Boulevard, Northridge, CA 91329 USA
www.infinitysystems.com
© 2009 Harman International Industries, Incorporated. All rights reserved. Tous droits réservés. • Part No. REF5032OM1/09
Infinity is a trademark of Harman International Industries, Incorporated, registered in the United States and/or other countries.
Infinity est une marque commerciale de Harman International Industries, Incorporated, déposée aux E.tats-Unis et/ou dans d'autres pays.

	5032i	5032cf
BL (T-m)	3.25	3.25
DCR (ohms)	2.30	2.30
Mms (g)	10.22	10.22
Sd (sq cm)	103.9	103.9
Cms (µm/N)	521	521
Vas (l)	7.89	7.89
Fs (Hz)	69.0	69.0
Qes	0.96	0.96
Qms	6.94	6.94
Qt	0.85	0.85

SPECIFICATIONS

	5032i	5032cf	5032gr
Type:	5-1/4" (130mm) 2-Way	5-1/4" (130mm) 2-Way NO GRILLE	GRILLE ONLY for 5-1/4" (130mm)
Impedance:	2 Ohms	2 Ohms	
Power Handling, RMS:	45W	45W	
Power Handling, Peak:	135W	135W	
Frequency Response:	67Hz – 21kHz	67Hz – 21kHz	
Sensitivity (2.83V, 1m):	92dB	92dB	

Grilles are included with the "i" version; they are optional for the "cf" version (use Reference model 5032gr).

WARRANTY: Reference Series speakers are warranted against defects. The duration of the speaker's warranty depends on the laws in the country in which it was purchased. Your local Infinity car audio retailer can help you determine the length of your warranty. To register your product, please visit us at www.infinitysystems.com.

SPECIFICATIONS

	5032i	5032cf	5032gr
Type:	5-1/4" (130mm) 2-Way	5-1/4" (130mm) 2-Way NO GRILLE	GRILLE ONLY for 5-1/4" (130mm)
Impedance:	2 Ohms	2 Ohms	
Power Handling, RMS:	45W	45W	
Power Handling, Peak:	135W	135W	
Frequency Response:	67Hz – 21kHz	67Hz – 21kHz	
Sensitivity (2.83V, 1m):	92dB	92dB	

Grilles are included with the "i" version; they are optional for the "cf" version (use Reference model 5032gr).

WARRANTY: Reference Series speakers are warranted against defects. The duration of the speaker's warranty depends on the laws in the country in which it was purchased. Your local Infinity car audio retailer can help you determine the length of your warranty. To register your product, please visit us at www.infinitysystems.com.

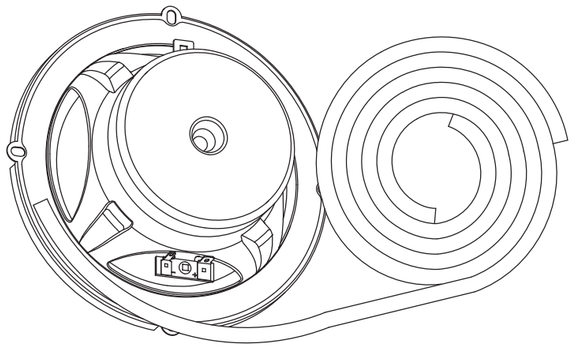

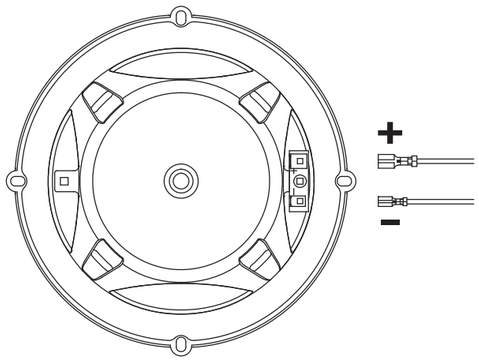

5032i

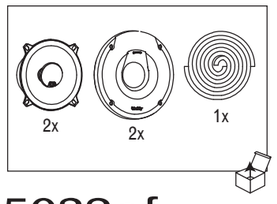

5032cf

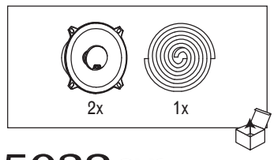

5032gr

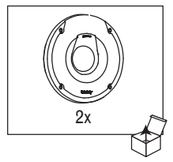

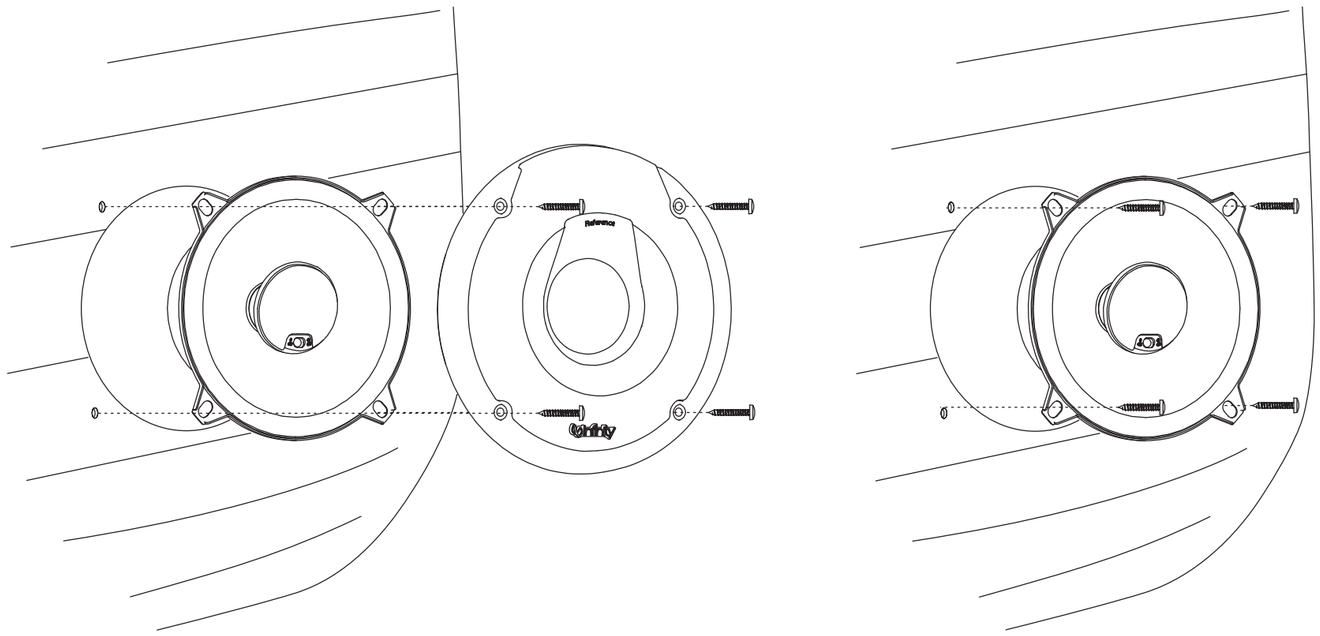

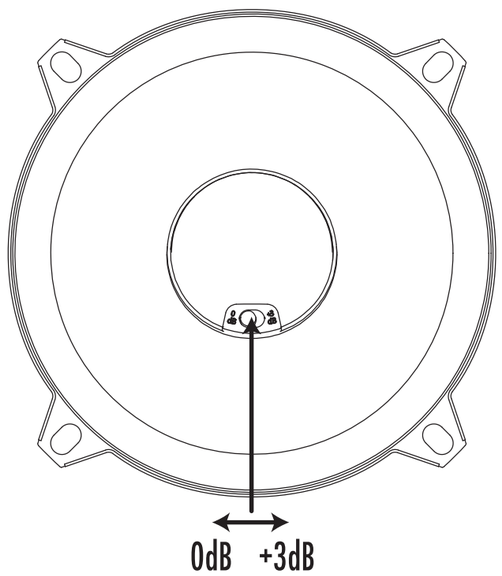

TWEETER-LEVEL CONTROL

This speaker system is equipped with a tweeter-level switch. The normal setting for this switch is the "0dB" position, which provides an apparently "flat" response. Tweeter output may be increased according to the user's preference, or to compensate for off-axis placement (where the speaker does not directly face the listening position), by setting the switch to the "+3dB" position.

TWEETER-LEVEL CONTROL

This speaker system is equipped with a tweeter-level switch. The normal setting for this switch is the "0dB" position, which provides an apparently "flat" response. Tweeter output may be increased according to the user's preference, or to compensate for off-axis placement (where the speaker does not directly face the listening position), by setting the switch to the "+3dB" position.

TWEETER-LEVEL CONTROL

This speaker system is equipped with a tweeter-level switch. The normal setting for this switch is the "0dB" position, which provides an apparently "flat" response. Tweeter output may be increased according to the user's preference, or to compensate for off-axis placement (where the speaker does not directly face the listening position), by setting the switch to the "+3dB" position.

TWEETER-LEVEL CONTROL

This speaker system is equipped with a tweeter-level switch. The normal setting for this switch is the "0dB" position, which provides an apparently "flat" response. Tweeter output may be increased according to the user's preference, or to compensate for off-axis placement (where the speaker does not directly face the listening position), by setting the switch to the "+3dB" position.

TWEETER-LEVEL CONTROL

This speaker system is equipped with a tweeter-level switch. The normal setting for this switch is the "0dB" position, which provides an apparently "flat" response. Tweeter output may be increased according to the user's preference, or to compensate for off-axis placement (where the speaker does not directly face the listening position), by setting the switch to the "+3dB" position.

TWEETER-LEVEL CONTROL

This speaker system is equipped with a tweeter-level switch. The normal setting for this switch is the "0dB" position, which provides an apparently "flat" response. Tweeter output may be increased according to the user's preference, or to compensate for off-axis placement (where the speaker does not directly face the listening position), by setting the switch to the "+3dB" position.

TWEETER-LEVEL CONTROL

This speaker system is equipped with a tweeter-level switch. The normal setting for this switch is the "0dB" position, which provides an apparently "flat" response. Tweeter output may be increased according to the user's preference, or to compensate for off-axis placement (where the speaker does not directly face the listening position), by setting the switch to the "+3dB" position.

TWEETER-LEVEL CONTROL

This speaker system is equipped with a tweeter-level switch. The normal setting for this switch is the "0dB" position, which provides an apparently "flat" response. Tweeter output may be increased according to the user's preference, or to compensate for off-axis placement (where the speaker does not directly face the listening position), by setting the switch to the "+3dB" position.

TWEETER-LEVEL CONTROL

This speaker system is equipped with a tweeter-level switch. The normal setting for this switch is the "0dB" position, which provides an apparently "flat" response. Tweeter output may be increased according to the user's preference, or to compensate for off-axis placement (where the speaker does not directly face the listening position), by setting the switch to the "+3dB" position.

TWEETER-LEVEL CONTROL

This speaker system is equipped with a tweeter-level switch. The normal setting for this switch is the "0dB" position, which provides an apparently "flat" response. Tweeter output may be increased according to the user's preference, or to compensate for off-axis placement (where the speaker does not directly face the listening position), by setting the switch to the "+3dB" position.

TWEETER-LEVEL CONTROL

This speaker system is equipped with a tweeter-level switch. The normal setting for this switch is the "0dB" position, which provides an apparently "flat" response. Tweeter output may be increased according to the user's preference, or to compensate for off-axis placement (where the speaker does not directly face the listening position), by setting the switch to the "+3dB" position.

TWEETER-LEVEL CONTROL

This speaker system is equipped with a tweeter-level switch. The normal setting for this switch is the "0dB" position, which provides an apparently "flat" response. Tweeter output may be increased according to the user's preference, or to compensate for off-axis placement (where the speaker does not directly face the listening position), by setting the switch to the "+3dB" position.

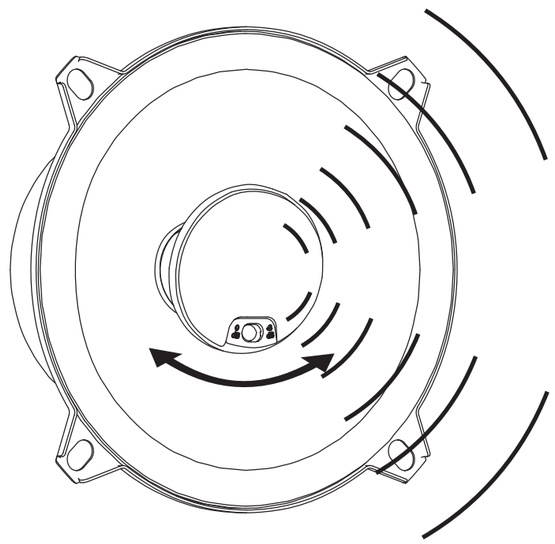

ROTATING TWEETER

The Reference 5032i/cf includes a rotating, angled tweeter mount, which is designed to allow the tweeter to be aimed toward the listening position. Since the tweeter's output becomes directional at extremely high frequencies, aiming the tweeter toward the listening position will improve high-frequency response and stereo imaging. *Before securing the grille,* grasp the tweeter housing around the edge and rotate the tweeter assembly so that the tweeter faces the listener as directly as possible. Then the grille may be permanently secured.

ROTATING TWEETER

The Reference 5032i/cf includes a rotating, angled tweeter mount, which is designed to allow the tweeter to be aimed toward the listening position. Since the tweeter's output becomes directional at extremely high frequencies, aiming the tweeter toward the listening position will improve high-frequency response and stereo imaging. *Before securing the grille,* grasp the tweeter housing around the edge and rotate the tweeter assembly so that the tweeter faces the listener as directly as possible. Then the grille may be permanently secured.

ROTATING TWEETER

The Reference 5032i/cf includes a rotating, angled tweeter mount, which is designed to allow the tweeter to be aimed toward the listening position. Since the tweeter's output becomes directional at extremely high frequencies, aiming the tweeter toward the listening position will improve high-frequency response and stereo imaging. *Before securing the grille,* grasp the tweeter housing around the edge and rotate the tweeter assembly so that the tweeter faces the listener as directly as possible. Then the grille may be permanently secured.

ROTATING TWEETER

The Reference 5032i/cf includes a rotating, angled tweeter mount, which is designed to allow the tweeter to be aimed toward the listening position. Since the tweeter's output becomes directional at extremely high frequencies, aiming the tweeter toward the listening position will improve high-frequency response and stereo imaging. *Before securing the grille,* grasp the tweeter housing around the edge and rotate the tweeter assembly so that the tweeter faces the listener as directly as possible. Then the grille may be permanently secured.

ROTATING TWEETER

The Reference 5032i/cf includes a rotating, angled tweeter mount, which is designed to allow the tweeter to be aimed toward the listening position. Since the tweeter's output becomes directional at extremely high frequencies, aiming the tweeter toward the listening position will improve high-frequency response and stereo imaging. *Before securing the grille,* grasp the tweeter housing around the edge and rotate the tweeter assembly so that the tweeter faces the listener as directly as possible. Then the grille may be permanently secured.

ROTATING TWEETER

The Reference 5032i/cf includes a rotating, angled tweeter mount, which is designed to allow the tweeter to be aimed toward the listening position. Since the tweeter's output becomes directional at extremely high frequencies, aiming the tweeter toward the listening position will improve high-frequency response and stereo imaging. *Before securing the grille,* grasp the tweeter housing around the edge and rotate the tweeter assembly so that the tweeter faces the listener as directly as possible. Then the grille may be permanently secured.

ROTATING TWEETER

The Reference 5032i/cf includes a rotating, angled tweeter mount, which is designed to allow the tweeter to be aimed toward the listening position. Since the tweeter's output becomes directional at extremely high frequencies, aiming the tweeter toward the listening position will improve high-frequency response and stereo imaging. *Before securing the grille,* grasp the tweeter housing around the edge and rotate the tweeter assembly so that the tweeter faces the listener as directly as possible. Then the grille may be permanently secured.

ROTATING TWEETER

The Reference 5032i/cf includes a rotating, angled tweeter mount, which is designed to allow the tweeter to be aimed toward the listening position. Since the tweeter's output becomes directional at extremely high frequencies, aiming the tweeter toward the listening position will improve high-frequency response and stereo imaging. *Before securing the grille,* grasp the tweeter housing around the edge and rotate the tweeter assembly so that the tweeter faces the listener as directly as possible. Then the grille may be permanently secured.

ROTATING TWEETER

The Reference 5032i/cf includes a rotating, angled tweeter mount, which is designed to allow the tweeter to be aimed toward the listening position. Since the tweeter's output becomes directional at extremely high frequencies, aiming the tweeter toward the listening position will improve high-frequency response and stereo imaging. *Before securing the grille,* grasp the tweeter housing around the edge and rotate the tweeter assembly so that the tweeter faces the listener as directly as possible. Then the grille may be permanently secured.

ROTATING TWEETER

The Reference 5032i/cf includes a rotating, angled tweeter mount, which is designed to allow the tweeter to be aimed toward the listening position. Since the tweeter's output becomes directional at extremely high frequencies, aiming the tweeter toward the listening position will improve high-frequency response and stereo imaging. *Before securing the grille,* grasp the tweeter housing around the edge and rotate the tweeter assembly so that the tweeter faces the listener as directly as possible. Then the grille may be permanently secured.

ROTATING TWEETER

The Reference 5032i/cf includes a rotating, angled tweeter mount, which is designed to allow the tweeter to be aimed toward the listening position. Since the tweeter's output becomes directional at extremely high frequencies, aiming the tweeter toward the listening position will improve high-frequency response and stereo imaging. *Before securing the grille,* grasp the tweeter housing around the edge and rotate the tweeter assembly so that the tweeter faces the listener as directly as possible. Then the grille may be permanently secured.

ROTATING TWEETER

The Reference 5032i/cf includes a rotating, angled tweeter mount, which is designed to allow the tweeter to be aimed toward the listening position. Since the tweeter's output becomes directional at extremely high frequencies, aiming the tweeter toward the listening position will improve high-frequency response and stereo imaging. *Before securing the grille,* grasp the tweeter housing around the edge and rotate the tweeter assembly so that the tweeter faces the listener as directly as possible. Then the grille may be permanently secured.

ROTATING TWEETER

The Reference 5032i/cf includes a rotating, angled tweeter mount, which is designed to allow the tweeter to be aimed toward the listening position. Since the tweeter's output becomes directional at extremely high frequencies, aiming the tweeter toward the listening position will improve high-frequency response and stereo imaging. *Before securing the grille,* grasp the tweeter housing around the edge and rotate the tweeter assembly so that the tweeter faces the listener as directly as possible. Then the grille may be permanently secured.